

Note!

Please note that this image is a general representation of the product and may differ slightly from your product.

Note!

Please note that during storage and transportation, especially at high ambient temperature, some of the oil and grease used for assembling may leak and stain the packaging. This is in no way detrimental to the product, wipe off the excessive oil/grease with a cloth.

Note!

Before installing this product, check the contents of the kit. If anything is missing, please check an Öhlins dealer.

Kit Contents

Description	Part No	Pcs
Shock absorber	ZO 509	2
Tool preload adjuster	03199-03	1
Sticker set "ÖHLINS"	10207-01	1
Owners manual	07241-02	1
Alternative spring		
Spring 46-50/230	66396-01	2

⚠ Warning!

Before installing this product, read the Öhlins Owner's Manual. The shock absorber is an important part of your vehicle and will affect the stability.

Shock Absorber Zontes 368G

ZO 509

Mounting Instructions

MOUNTING INSTRUCTIONS

⚠ Warning!

It is advisable to have an Öhlins dealer install the shock absorber.

⚠ Warning!

If working on a raised vehicle, ensure it is securely supported so that it will not tip over.

Note!

Before mounting this product clean the vehicle thoroughly.

Note!

When working on this product, always see the Vehicle Service Manual for vehicle specific procedures and important data.

1

Put the motorcycle on the work stand so that the rear wheel barely touches the ground. Make sure the motorcycle is in a stable position.

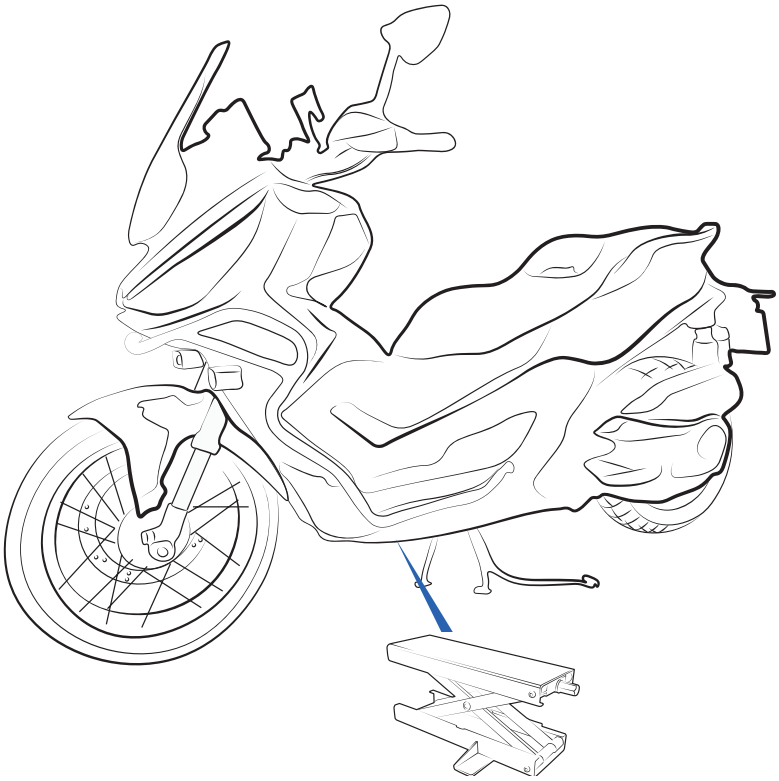

2

Remove the standard shock absorber by loosening the upper mounting bolt ① and the lower mounting bolt ②

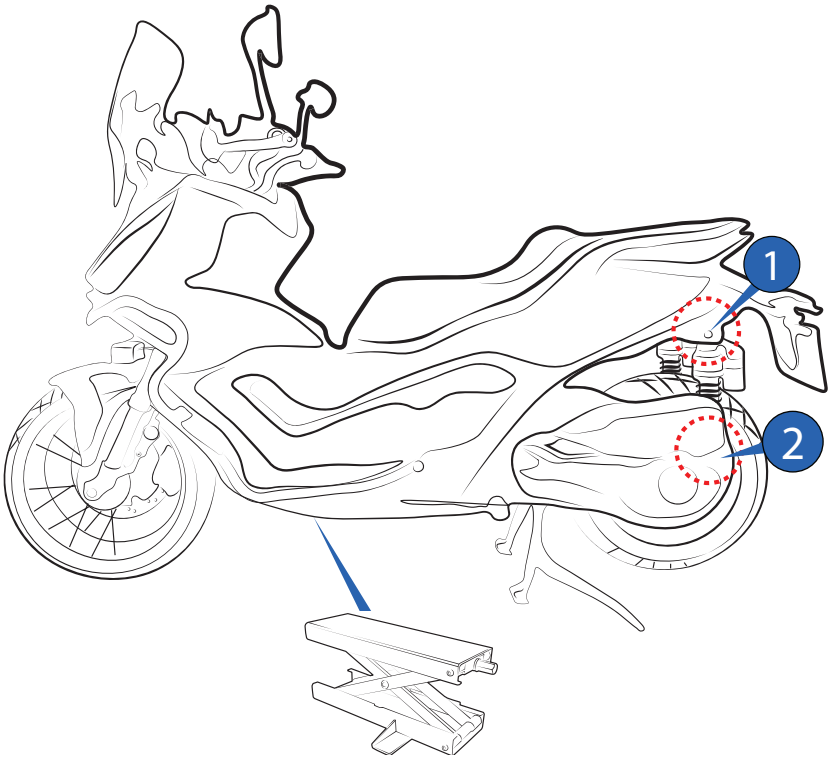

MOUNTING INSTRUCTIONS

3

Install the Öhlins shock absorber according to diagram P1

Tighten the upper mounting nut ① at a torque value as specified in the vehicle service manual and the lower mounting screw ② at 20 Nm using thread locker.
Reverse all the procedures as necessary.

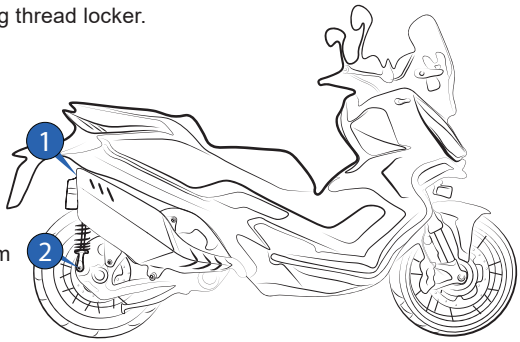

Torque: 20 Nm

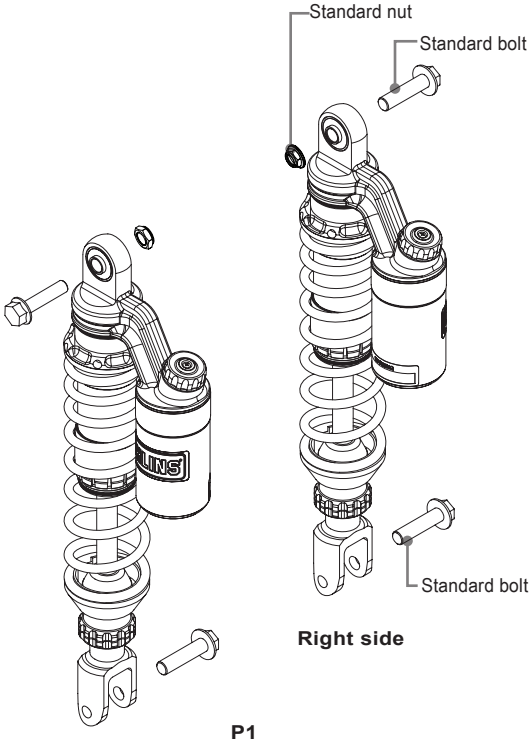

Left side

Right side

P1

Note!

DUE TO VEHICLE MANUFACTURING TOLERANCES THE GAP BETWEEN PLASTIC COVER AND CYLINDER HEAD MAY VARY.
IF NARROWER THAN 7 MM AT SUSPENSION FULLY EXTEND, TRIM OR GRIND THE PLASTIC APPROX 3 MM PART TO PREVENT CONTACT.

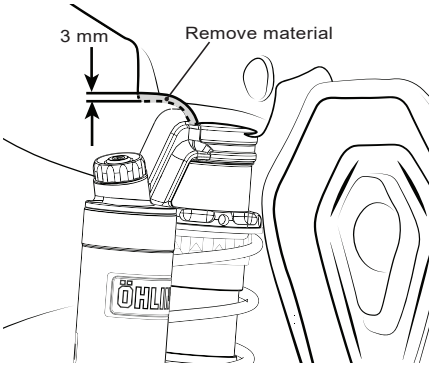

Note!

Lower the vehicle so that the suspension is slightly compressed before tightening the screws.

Caution!

Ensure that all screws are tightened to the correct torque and that nothing fouls or restricts movement of the shock absorber when the suspension is fully compressed or extended.

This page intentionally left blank

This page intentionally left blank

This page intentionally left blank

ADJUSTMENTS

⚠ Warning!

Before riding, always make sure that the basic settings made by Öhlins are according to recommended Set-up Data. Read about adjustments and setting up in the Öhlins Owner's Manual before you make any adjustments. Contact an Öhlins dealer if you have any questions about setting up.

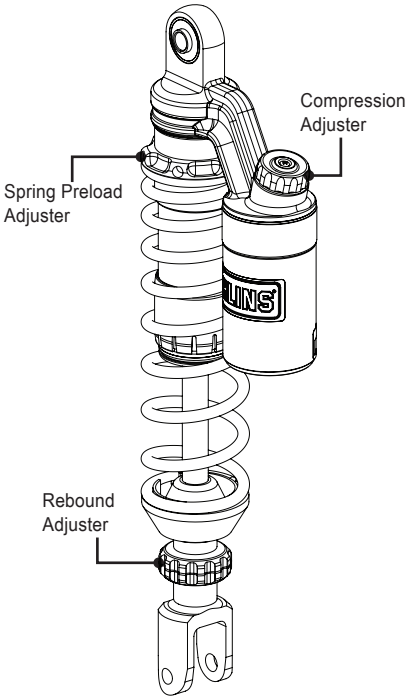

SET-UP DATA

Recommended set-up

Spring Preload.....	13 mm
Rebound adjuster	16 Clicks
Compression adjuster.....	16 Clicks

Shock absorber data

Length	405.5 mm
Stroke	117.5 mm

Spring	Installed Spring	Alternative Spring
Part No	66396-52	66396-01
Free spring length...	230 mm	230 mm
Spring rate.....	9-14 N/mm	11-17 N/mm
Preload adj.range....	[0-27] mm	[0-22] mm

Öhlins products are subject to continuous improvement and development, therefore, although these instructions include the most up-to-date information available at the time of printing, minor updates may occur.

To find the latest information contact an Öhlins distributor. Please contact Öhlins if you have any questions regarding the contents in this document.

Part no. MI_ZO 509_EN_0
Issued 2025-03-25

© Öhlins Asia Co. Ltd. All rights reserved. Any reprinting or unauthorized use without the written permission of Öhlins Racing AB is prohibited.

Öhlins Asia Co. Ltd
700/937 Moo5, Tambol Nongkhaga,
Amphur Phantong, Chonburi Province
20160 Thailand