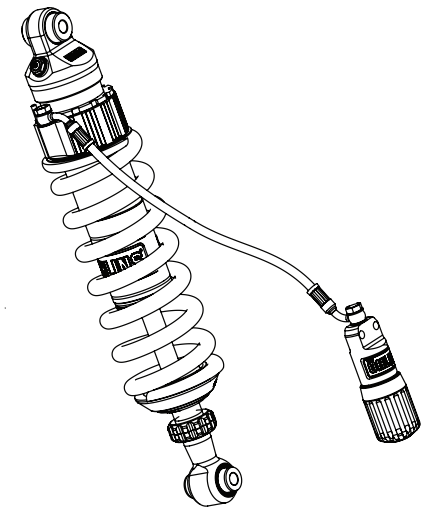

Note!

Before installing this product, check the contents of the kit. If anything is missing, please check an Öhlins dealer.

Kit Contents

Description	Part No	Pcs
Shock absorber	RE 407	1
Bracket	01165-34	1
P-Clamp 0.5”	60231-20	1
Screw M6x25	05404-06	2
Screw M6x30	05404-07	1
Nut M6	00430-02	1
Sticker set "ÖHLINS"	10207-01	1
Owners manual road & track	07241-02	1

Note!

Please note that this image is a general representation of the product and may differ slightly from your product.

Note!

Please note that during storage and transportation, especially at high ambient temperature, some of the oil and grease used for assembling may leak and stain the packaging. This is in no way detrimental to the product, wipe off the excessive oil/grease with a cloth.

⚠ Warning!

Before installing this product, read the Öhlins Owner’s Manual. The shock absorber is an important part of your vehicle and will affect the stability.

Shock Absorber for Royal Enfield Himalayan 450

RE 407

Mounting Instructions

MOUNTING INSTRUCTIONS

⚠ Warning!

It is advisable to have an Öhlins dealer install the shock absorber.

⚠ Warning!

If working on a raised vehicle, ensure it is securely supported so that it will not tip over.

Note!

Before mounting this product clean the vehicle thoroughly.

Note!

When working on this product, always see the Vehicle Service Manual for vehicle specific procedures and important data.

1

Put the motorcycle on a work stand so that the rear wheel barely touches the ground.
Make sure the motorcycle is in a stable position.

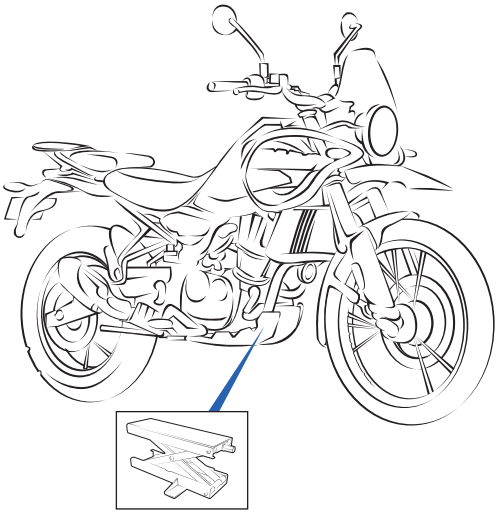

2

Remove the seat by using the ignition key.

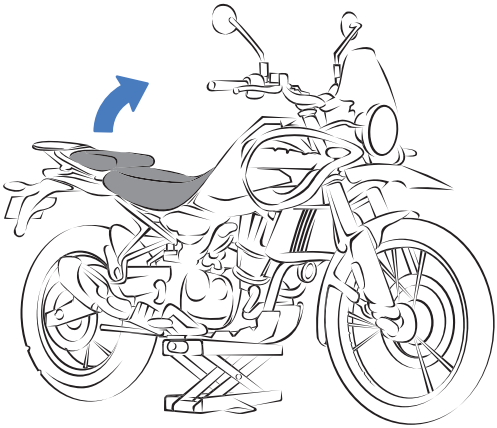

3

Remove the fuel tank Ⓐ by loosening the screws ①②③ and connectors.

⚠ Warning!

Follow the motorcycle service manual instructions for removal and installation of the fuel tank.

3.1

Remove the side fairing Ⓑ by loosening the screw ④.

Repeat the operation on the opposite side.

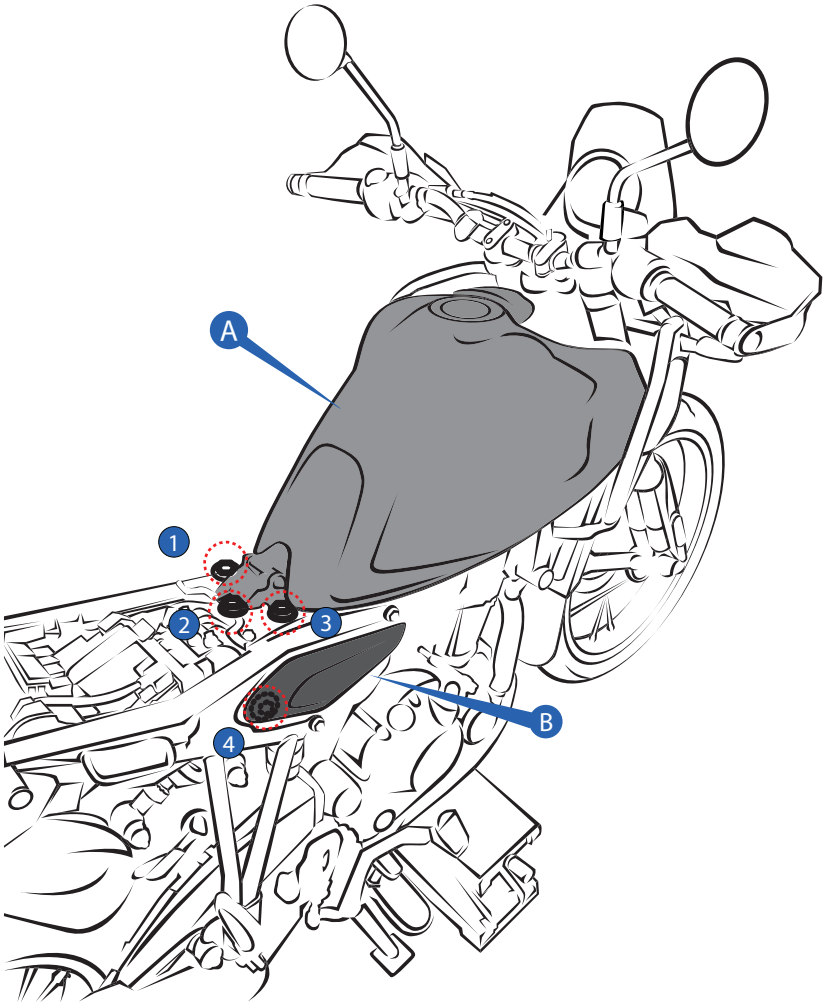

MOUNTING INSTRUCTIONS

4

Remove the standard shock absorber Ⓒ by loosening the upper and lower mounting bolts ①②.

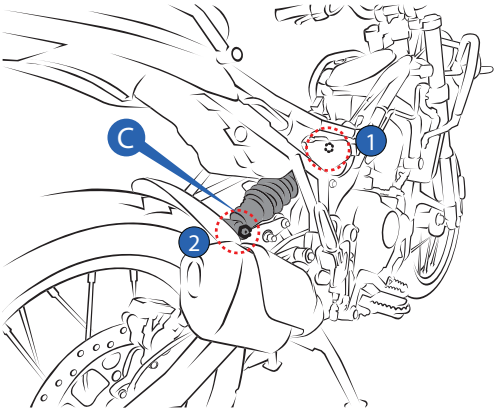

5

Install the Öhlins shock absorber with the hose pointing upwards.
Tighten the upper and lower mounting bolts ③④ at a torque value as specified in the vehicle service manual.

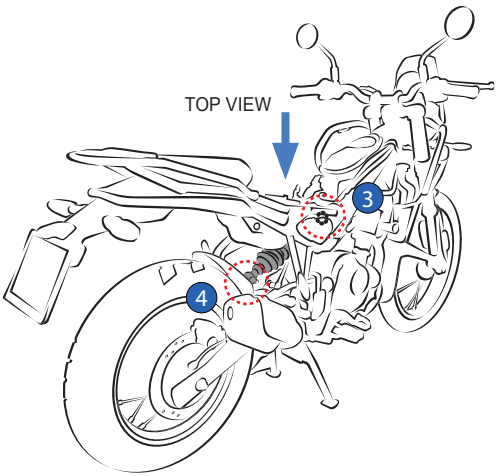

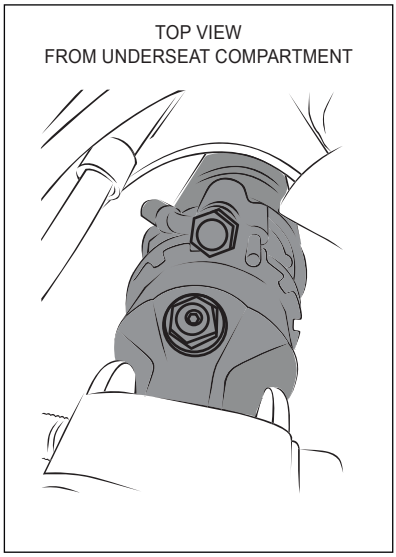

MOUNTING INSTRUCTIONS

6

Install the clamp brackets on the right frame ⒹⒺ by tightening the screws M6x25 ①② at a torque 7 N.m with thread locker.

Adjust the position of the clamp brackets at 75 mm distance from subframe and adjust the direction of the hydraulic preload adjustment knob ensuring the hose is free from sharp bends and twisting according to picture below.

6.1

Replace the screws of brake fluid tank Ⓕ by screw M6x30 ③ and install P-clamp and Nut M6 at the end of screw to secure the hydraulic hose in position, following the orientation as Diagram 1.

Reverse all the procedures as necessary.

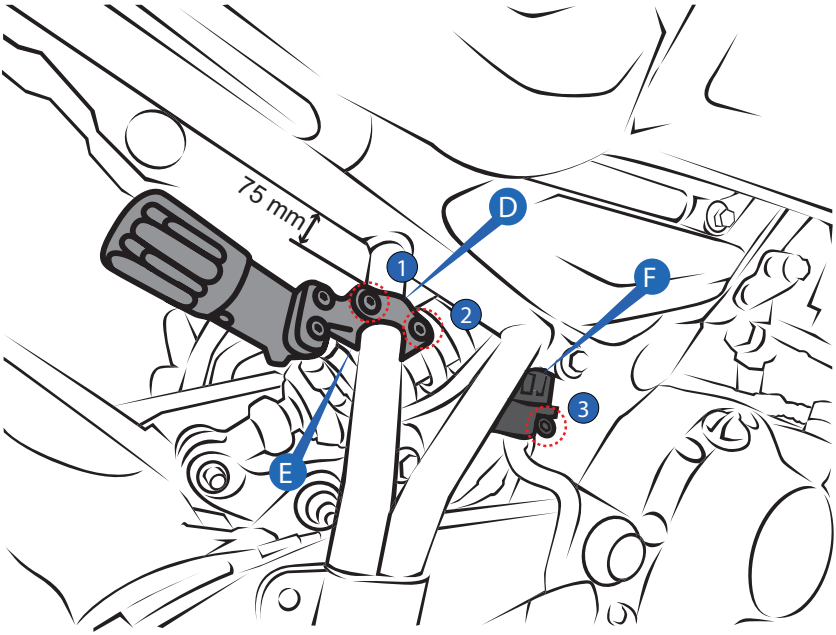

Diagram 1

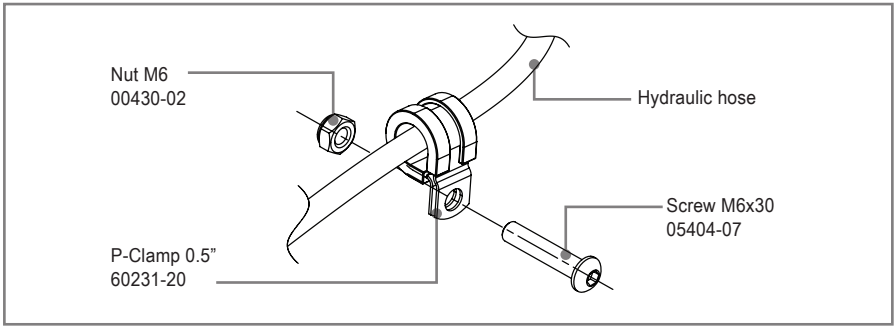

This page intentionally left blank

This page intentionally left blank

ADJUSTMENTS

⚠ Warning!

Before riding, always make sure that the basic settings made by Öhlins are according to recommended Set-up Data. Read about adjustments and setting up in the Öhlins Owner's Manual before you make any adjustments. Contact an Öhlins dealer if you have any questions about setting up.

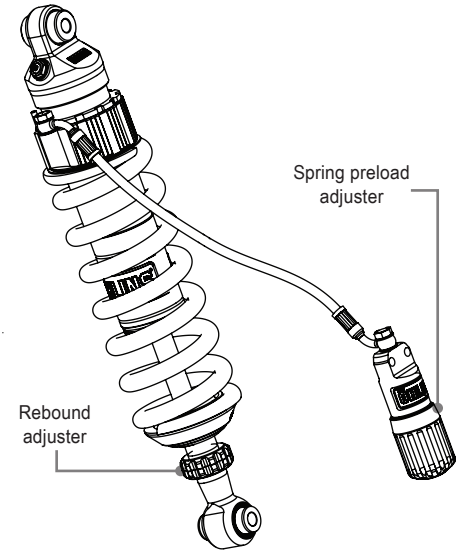

SET-UP DATA

Recommended set-up	
Spring Preload	10 mm
Rebound adjuster	14 Clicks

Shock absorber data	
Length	400 mm
Stroke	80.5 mm

Spring data	**Installed spring**
Part No	61099-41
Free spring length ...	220 mm
Spring rate	115 N/mm
Preload adj.range ...	[10-20] mm

Öhlins products are subject to continuous improvement and development, therefore, although these instructions include the most up-to-date information available at the time of printing, minor updates may occur.

To find the latest information contact an Öhlins distributor. Please contact Öhlins if you have any questions regarding the contents in this document.

Part no. MI_RE 407_EN_1
Issued 2025-10-10

© Öhlins Asia Co. Ltd. All rights reserved. Any reprinting or unauthorized use without the written permission of Öhlins Racing AB is prohibited.

Öhlins Asia Co. Ltd
700/937 Moo5, Tambol Nongkhaga,
Amphur Phantong, Chonburi Province
20160 Thailand