

Note!

Before installing this product, check the contents of the kit. If anything is missing, please contact an Öhlins dealer.

Kit Contents

Description	Part No	Pcs
Shock absorber	IN 124	2
Sticker set Öhlins	10207-01	1
Tool preload adjuster	03199-01	1
Owner's manual	07241-02	1

Note!

Please note that this image is a general representation of the product and may differ slightly from your product.

Note!

Please note that during storage and transportation, especially at high ambient temperature, some of the oil and grease used for assembling may leak and stain the packaging. This is in no way detrimental to the product, wipe off the excessive oil/grease with a cloth.

⚠ Warning!

This product is designed to use without saddlebags if in doubt, please check to ensure fit.

⚠ Warning!

Before installing this product, read the Öhlins Owner's Manual. The shock absorber is an important part of your vehicle and will affect the stability.

Shock Absorber for Indian Scout Blackline

IN 124

Mounting Instructions

ÖHLINS
ADVANCED SUSPENSION TECHNOLOGY

Install shock Absorbers

⚠ Warning!

It is advisable to have an Öhlins dealer install the shock absorber.

⚠ Warning!

If working on a raised vehicle, ensure it is securely supported so that it will not tip over.

Note!

Before mounting this product clean the vehicle thoroughly.

Note!

When working on this product, always see the Vehicle Service Manual for vehicle specific procedures and important data.

1

Put the motorcycle on a work stand so that the rear wheel barely touches the ground.

2

Refer to the vehicle service manual to install Öhlins shock absorbers.

Note!

Lower the vehicle so that the suspension is slightly compressed before tightening the screws.

Caution!

Ensure that all screws are tightened to the correct torque and that nothing fouls or restricts movement of the shock absorber when the suspension is fully compressed or extended.

This page intentionally left blank

ADJUSTMENTS

⚠ Warning!

Before riding, always make sure that the basic settings made by Öhlins are according to recommended Set-up Data. Read about adjustments and setting up in the Öhlins Owner's Manual before you make any adjustments. Contact an Öhlins dealer if you have any questions about setting up.

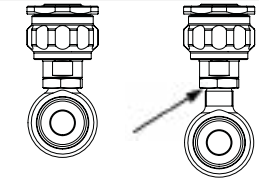

Min. Position *Max. Position*

⚠ Warning!

The adjustable end eye/bracket must not be threaded out more than that the groove is fully visible beneath the lock nut. This is maximum length. After adjusting, make sure that the lock nut is tightened (30Nm).

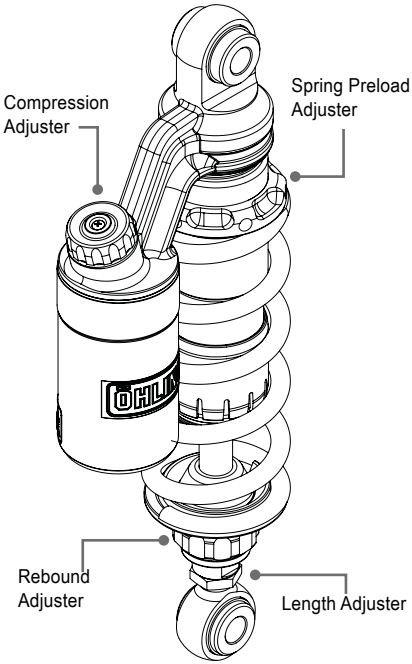

SET-UP DATA

Recommended set-up

Spring Preload	30 mm
Compression Adjuster.....	15 Clicks
Rebound Adjuster	12 Clicks

Shock absorber data

Length	293 $^{+6}/_{-4}$ mm
Stroke	44 mm

Spring

Part No	60281-30
Free spring length	180 mm
Spring rate.....	41N/mm
Preload adjustment range	[0-53]mm

Öhlins products are subject to continuous improvement and development, therefore, although these instructions include the most up-to-date information available at the time of printing, minor updates may occur.

To find the latest information contact an Öhlins distributor. Please contact Öhlins if you have any questions regarding the contents in this document.

Part no. MI_IN 124_EN_0
Issued 2021-03-29

© Öhlins Asia Co. Ltd. All rights reserved. Any reprinting or unauthorized use without the written permission of Öhlins Racing AB is prohibited.

Öhlins Asia Co. Ltd
700/937 Moo5, Tambol Nongkhaga,
Amphur Phantong, Chonburi Province
20160 Thailand

ÖHLINS
ADVANCED SUSPENSION TECHNOLOGY

www.ohlins.com