

Kit Contents		
Description	**Part No**	**Pcs**
Front fork kit	FKA 226	1
O-ring	00638-88	2
Spring kit 5.5 (pair)	08433-55	1
Spring kit 6.5 (pair)	08433-65	1
Sticker set Öhlins		
Owner's manual	07287-02	1

Note!

Please note that there can be small differences between your product and the images in these instructions.

Note!

Please note that during storage and transport, especially at high ambient temperature, some of the oil and grease used for assembly may leak and stain the packaging. This will not cause damage to the product, wipe off the excessive oil or grease with a cloth.

⚠ Warning!

This kit should only be installed by an authorized Öhlins dealer. The installation procedure requires certain tools.

Note!

Before you install this product, check the kit contents. If anything is missing, please contact an Öhlins dealer.

⚠ Warning!

Before you install this product, read the Öhlins Owner's manual and this document. This product is an important part of the vehicle and the vehicle stability.

Front Fork Kit for KTM 690 SMC R / Husqvarna 701 Supermoto / GASGAS SM 700

FKA 226

Mounting Instructions

ÖHLINS

MOUNTING INSTRUCTIONS

⚠ Warning!

We strongly recommend to let an Öhlins dealer install this product.

⚠ Warning!

If you work with a lifted vehicle, make sure that it is safely supported to prevent it from tipping over.

👁 Note!

When you work with this product, see the vehicle service manual for vehicle specific procedures and important data.

👁 Note!

Before you install this product clean the vehicle.

⚠ Warning!

Spring compression creates a potential danger because of the violent force that loaded springs are capable of. Beware of this when you work with the front fork.

TOOLS, GREASE AND FLUID

Tools needed for the original front fork

- Refer to the vehicle service manual for tools needed for removing/installing the front fork from the vehicle.
- Refer to the vehicle service manual for tools needed for removing the cartridge from the front fork.

Tools needed for the Öhlins cartridge kit

Tool	Part no	Applies	Size
Vehicle service manual			
Torque wrench			
Wrench		Shaft extension	19 mm
Hex key		Compression and rebound bleed adjusters	3 mm
Socket		Preload adjuster	14 mm
Ruler		Suspension fluid level	
Öhlins tool	01765-03	Shaft extension	
Wrench		Top cap	50 mm
Öhlins tool	01797-07	Seal head	
Suspension fluid	01309-xx		
Grease	00146-01		100 g

MOUNTING INSTRUCTIONS

1 Remove the original front fork

Note!

The following procedure applies to both front fork legs.

1.1

Put the motorcycle on a workstand so that the front wheel barely touches the ground.

⚠ Warning!

Make sure the vehicle is securely supported so that it will not fall over.

1.2

Remove front fender, brake calipers, speed sensor (if present) and front wheel.

1.3

Release main spring preload fully (if present).

1.4

Note front fork leg position.

1.5

Loosen upper triple clamp.

1.6

Loosen (do not remove) top cap ½ turn.

1.7

Loosen lower triple clamp.

1.8

Remove front fork legs from triple clamps.

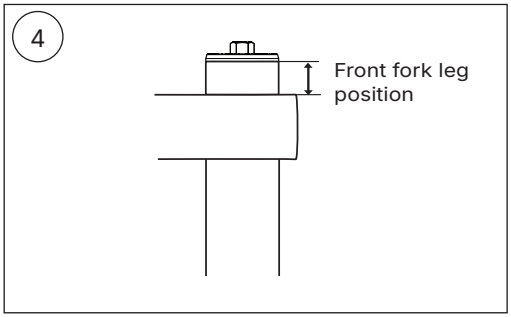

MOUNTING INSTRUCTIONS

Remove original

2.1
Loosen top cap from outer tube.

2.2
Slide outer tube down until it stops.

2.3
Loosen and remove top cap from shaft according to vehicle service manual.

2.4
Remove main spring and surrounding parts from front fork leg.

2.5
Drain front fork leg of suspension fluid.

2.6
Loosen cartridge according to vehicle service manual.

2.7
Remove cartridge from front fork leg.

Install the Öhlins cartridge kit

Caution!

The cartridge kit is divided into compression and rebound cartridges.
Install compression cartridge marked "COMP" in left hand side front fork leg.
Install rebound cartridge marked "REB" in right hand side front fork leg.

2.8
Remove top cap (A), guide sleeve and preload tube (B).

2.9
Insert cartridge in front fork leg.

2.10
Install bottom screw according to instructions in the vehicle service manual.

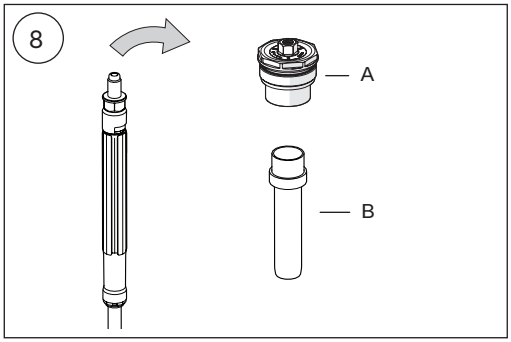

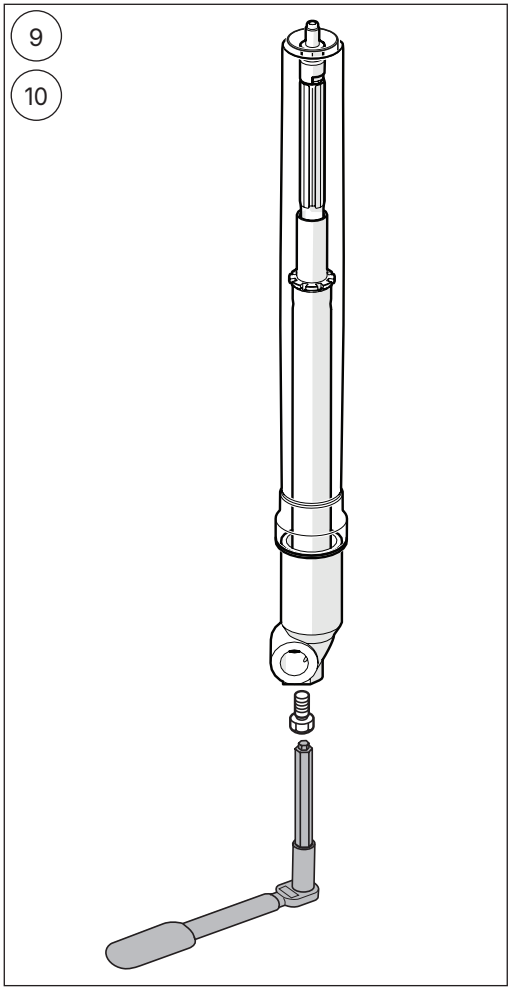

MOUNTING INSTRUCTIONS

2.11
Pour approximately 0.5 litre Öhlins suspension fluid in front fork leg.

⚠ Warning!

Fluid level must be approximately 50 mm above top of seal head.

2.12
Use a hex key to open compression and rebound adjusters fully. Install top cap directly to shaft extension (no main spring or preload tube). Pull up outer tube and tighten it to the top cap with your hand.
[Hex key 3 mm]

2.13
Pull outer tube up and down 10-15 times to pump out all air from the cartridge.

2.14
Remove top cap from front fork leg.

2.15
Make sure that shaft assembly and outer tube are in their bottom positions.
Set suspension fluid level according to chapter “Setup Data”.

2.16
Install shaft extension tool on top of shaft extension.
Install main spring with the marking up (C), guide sleeve and preload tube (B) over shaft extension tool.
[**01765-03 shaft extension tool**]

2.17
Pull up shaft assembly and grab spring support with a wrench tool.
[**Wrench 19 mm**]

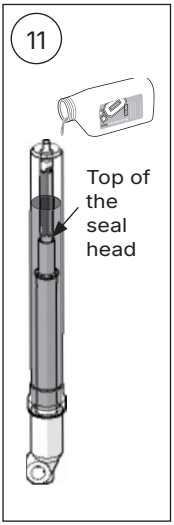

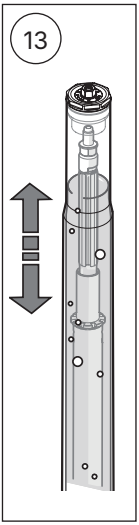

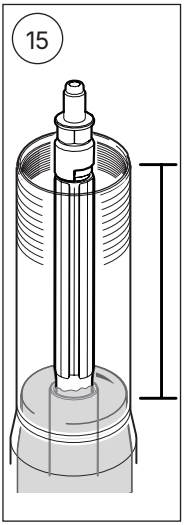

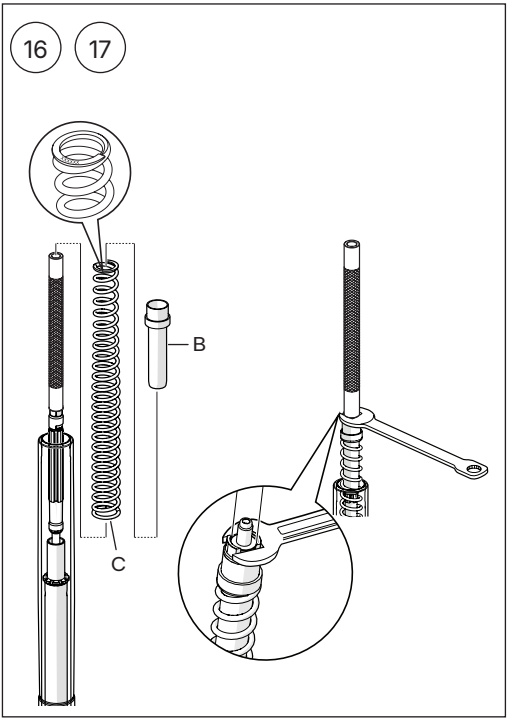

MOUNTING INSTRUCTIONS

2.18
Install o-ring on top cap. Apply grease on o-ring and thread.
[**00638-88 o-ring**]
[**00146-01 grease**]

2.19
Make sure that compression and rebound adjusters are fully open before installing top cap. Use a hex key to open compression and rebound adjusters. Remove pull-up tool and install top cap to the shaft extension. Tighten to 30 Nm.
[**Hex key 3 mm**]
[**Socket 14 mm**]

2.20
Remove wrench from spring support.

2.21
Pull up outer tube. Make sure front fork leg is in a fully extended position. Tighten top cap to outer tube. Tighten to 10 Nm.
[**Wrench 50 mm**]

2.22
Set compression, rebound and main spring adjusters according to chapter “Setup Data”. Use a hex key for compression and rebound adjusters. Use a socket for main spring preload adjuster.
[**Hex key 3 mm**]
[**Socket 14 mm**]

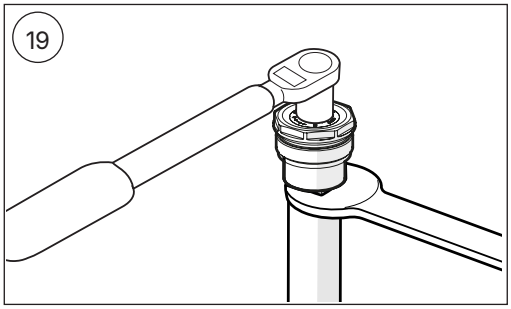

MOUNTING INSTRUCTIONS

4 Install the front fork in the vehicle

4.1
Install front fork legs in vehicle at recommended front fork leg position, according to chapter “Setup data”.

4.2
Remaining installation, instructions according to vehicle service manual.

SETUP DATA

Compression	14	clicks
Rebound	14	clicks
Suspension fluid level	100	mm
Suspension fluid volume	540	ml
Front leg position	Standard position	
Suspension fluid	01309-xx	

MAIN SPRING RECOMMENDATION

Make sure you choose the correct main spring for your rider weight, driving style and preferences. Below you find a general recommendation of main spring rate for your weight. Contact an authorized Öhlins service center for advice.

Rider weight [kg]	60	70	80	90	100	110	120	130
Spring rate [N/mm]	5,5	5,5	5,5	6	6	6	6,5	6,5
Preload [mm]	0	1	3	1	4	7	5	8
Part number left hand side fork leg	08433-55	08433-55	08433-55	08433-55	08433-55	08433-55	08433-65	08433-65
Part number right hand side fork leg	08433-55	08433-55	08433-55	08433-65	08433-65	08433-65	08433-65	08433-65

Main springs are packed in pairs.

Öhlins products are subject to continuous improvement and development, therefore, although these instructions include the most up-to-date information available at the time of printing, minor updates may occur.

To find the latest information contact an Öhlins distributor. Please contact Öhlins if you have any questions regarding the contents in this document.

Part no. MI_FKA226_0
Issued 2026-03-18

© Öhlins Group AB. All rights reserved. Any reprinting or unauthorized use without the written permission of Öhlins Group AB is prohibited.

Öhlins Group AB
Box 722
S-194 27 Upplands Väsby, Sweden
Phone +46 8 590 025 00
fax +46 8 590 025 80