

Kit Contents

Description	Part No	Pcs
Cap screw	15209-01	2
Top Cap	60005-03	2
O-ring	00576-14	2
Comp. damping rod	FDK 111-C	1
Reb. damping rod	FDK 111-R	1
Spring 5.5 N/mm	68000-04	2
Spring 6.0 N/mm	68000-05	2
Sleeve	61123-04	2
Washer	60049-01	2
Washer copper	60048-01	2
Circlip	01499-02	2
Öhlins sticker blue	00192-01	2
Öhlins sicker black	01185-04	2

Note!

Before installing this product, check the contents of the kit. If anything is missing, please contact an Öhlins dealer.

⚠ Warning!

This kit should only be installed by an authorized Öhlins dealer. The installation procedure requires certain tools.

⚠ Warning!

Before installing this product, read the Öhlins Owner's Manual. The shock absorber/front fork/steering damper

Note!

Please note that this image is a general representation of the product and may differ slightly from your product.

Note!

Please note that during storage and transportation, especially at high ambient temperature, some of the oil and grease used for assembling may leak and stain the packaging. This is in no way detrimental to the product, wipe off the excessive oil/grease with a cloth.

Fork Damping Kit for Honda MSX-2016/2013

FDK 111

Mounting Instructions

ÖHLINS
ADVANCED SUSPENSION TECHNOLOGY

MOUNTING INSTRUCTIONS

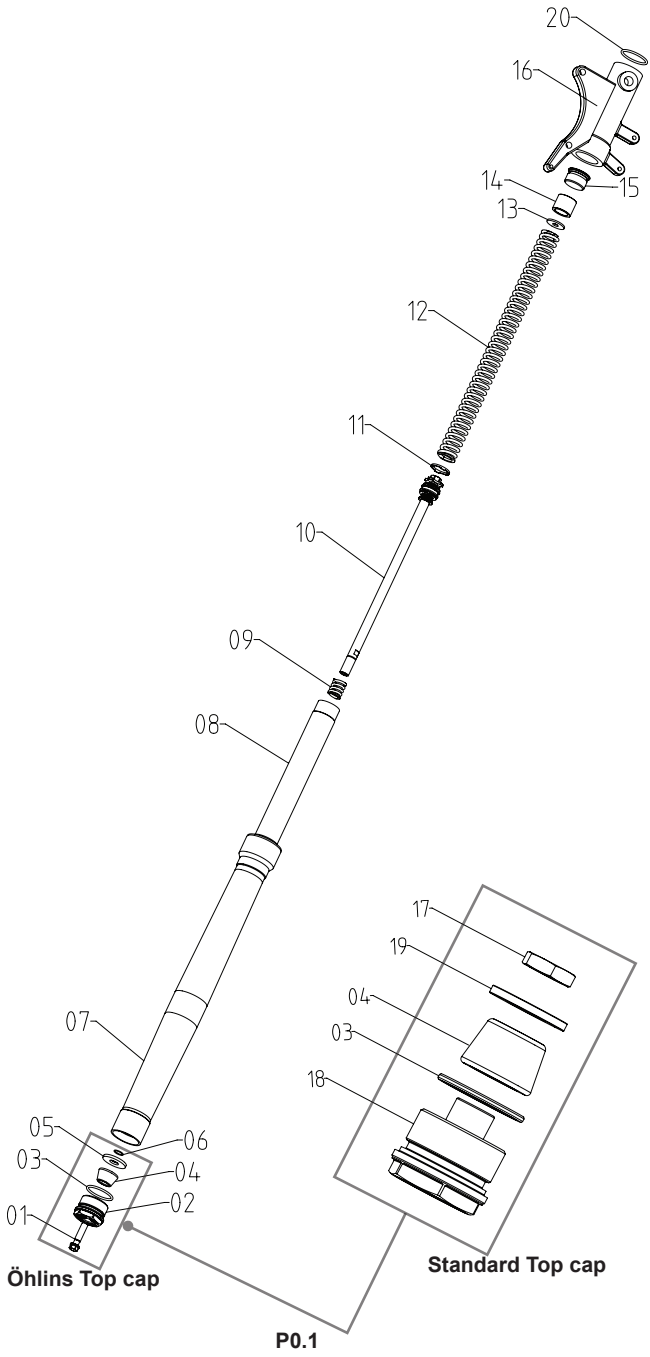

MOUNTING INSTRUCTIONS

Note!

The front fork is a very important part of the vehicle and will therefore affect the stability.

Note!

Read and make sure that you understand the information in this manual before you use this product.
If you have any questions regarding installation or maintenance please contact your nearest Öhlins dealer

Note!

Öhlins can not be held responsible for any damage to the front fork, vehicle, other property or injury to persons, if the instructions for installing and maintenance are not followed exactly.

⚠ Warning!

This product was developed and designed exclusively for a specific vehicle model and should only be installed on the intended vehicle model in its original condition as delivered from the vehicle manufacturer.

⚠ After installing this product, take a test ride at low speed to make sure that your vehicle has maintained its stability.

Note!

When working on this product, always consult your Vehicle Service Manual.

Note!

This Manual should be considered as a part of the product and should therefore accompany the product throughout its life cycle.

Safety Symbols

In this manual, mounting instructions and other technical documents, important information concerning safety is distinguished by the following symbols:

⚠ The Safety Alert Symbol means: Warning! Your safety is involved.

⚠ Warning!

The Warning Symbol means: Failure to follow warning instructions can result in severe or fatal injury to anyone working with, inspecting or using the front fork, or to bystanders.

Caution!

The Caution Symbol means: Special precautions must be taken to avoid damage to the front fork.

Note!

The Note Symbol indicates information that is important regarding procedures.

TOOLS ASSY FORK KIT 60000-04

24642-01

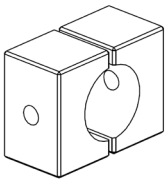

24641-01



1-REMOVE ORIGINAL FRONT FORK

⚠ Warning!

It is advisable to have an Öhlins dealer install the shock absorber/front fork/steering damper.

⚠ Warning!

If working on a raised vehicle, ensure it is securely supported so that it will not tip.

⚠ Warning!

Do not scratch ÖHLINS top caps use marking tape

Note!

Before mounting this product clean the vehicle thoroughly.

Note!

When working on this product, always see the Vehicle Service Manual for vehicle specific procedures and important data.

1.1

Loosen (do not remove) both fork top caps ½ turn.

1.2

Remove both the fork legs as per Vehicle Service Manual instructions.

2-DISASSEMBLE ORIGINAL FRONT FORK

Note!

Refer to picture P0.1 for components location.

2.1

Unscrew the top cap (18) from the outer tube (07) and loosen the nut (17).

Caution!

Make sure that the lose parts will not fall out when draining the fork leg.

2.2

Remove the top cap (18) and remove the top out rubber (04) the washer (19) and the nut (17)

2.3

Drain the fork leg of oil.

2.4

Extend the fork leg until the clamping holes on the steel tube (08) are visible.

2.5

Clamp the steel tube (08) in a vice by using the tool 24642-01.

2.6

Use a heat gun to soften the thread-locking adhesive between the steel tube (08) and the fork bottom (16).

Note!

The fork bottom (16) and the steel tube (08) are jointed together by left-hand thread.

2.7

Use the motorcycle wheel axle as a lever to loosen the fork bottom (16) from the steel tube (08).Do not lose the O-ring (20)

2.8

Use the tool 24641-01 to remove the bottom cap (15)

2.9

Remove the washer (13) and the spring (12).

2.10

Remove the damping rod (10).

Caution!

Do not damage the piston ring (11). It has to be re-used.

2.11

Remove the top-out spring (09) and the piston ring (11).

3 - INSTALL ÖHLINS FORK DAMPING KIT

Caution!

The fork damping kit is divided into one compression rod and one rebound rod.

3.1

Install the previously removed piston ring (11) to the Öhlins damping rod (10) as per picture P3.1. Make sure the stepped side of the piston ring (11) is oriented to the spring (17) side.

3.2

Insert the top-out spring (09) and the Öhlins damping rod (10) into the steel tube (08).

3.3

Extend the fork leg until the clamping holes on the steel tube (08) are visible.

3.4

Clamp the steel tube (08) in a vice by using the tool 24642-01.

3.5

Insert the Öhlins spring (12) the washer (13) and the spacer (14) into the steel tube (08).

3.6

Apply grease on the O-ring on the bottom cap (15) and install it.
Tighten with a torque value of 40Nm.

3.7

Compress the fork and install the circlip (06) on the damping rod (10).

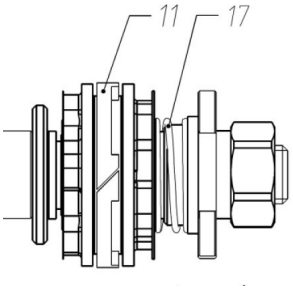

Compression rod

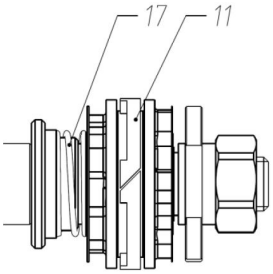

Rebound rod

P3.1

3-INSTALL ÖHLINS FORK DAMPING KIT

3.8

Install the washer (05) with the chamfer facing the circlip, bump rubber (04) [reverse direction by taper on top].
and the Öhlins top cap (02) on the damping rod (10) tightening it with the Öhlins screw (01) placing the copper washer in between
Tighten with a torque value of 15Nm and use

Note!

Compress and extend repetitively the fork leg while filling the oil in order to remove the air from it.

3.9

Fill the fork leg with 235 ml of oil.
Recommended oil : Öhlins 01309-01.

3.10

Apply grease on the Öhlins O-ring (03).
Extend the fork leg and tighten the Öhlins top cap (02) to the outer tube (07).

3.11

Apply Loctite 270 to the steel tube (08). Clamp the fork bottom (16) in a vice and tighten it with the steel tube (08) using the tool 24641-01.
Tight with a torque value of 70Nm.

3.12

Re-install the fork legs as per Vehicle Service Manual instructions.

Recommended spring

Spring part No.	Spring rate	For rider weight
68000-04	5.5 N/mm	Below 80 kg
68000-05	6.0 N/mm	Above 80 kg

DIAGRAM-OIL LEVEL/SPRING FORCE

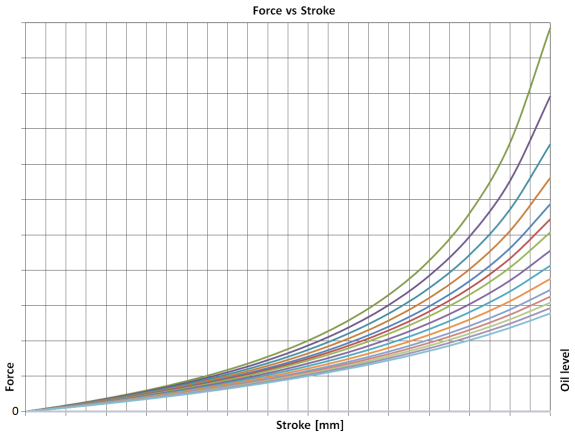

Öhlins products are subject to continuous improvement and development, therefore, although these instructions include the most up-to-date information available at the time of printing, minor updates may occur.

To find the latest information contact an Öhlins distributor. Please contact Öhlins if you have any questions regarding the contents in this document.

Part no. MI_FDK111_EN_3
Issued 2019-03-27

© Öhlins Asia Co. Ltd. All rights reserved. Any reprinting or unauthorized use without the written permission of Öhlins Racing AB is prohibited.

Öhlins Asia Co. Ltd
700/937 Moo5, Tambol Nongkhaga,
Amphur Phantong, Chonburi Province
20160 Thailand

ÖHLINS
ADVANCED SUSPENSION TECHNOLOGY

www.ohlins.com