

Kit Contents		
Description	**Part No**	**Pcs**
Shock absorber	BM307	1
Tie rap	00231-01	2
Screw M6x25	05404-06	2
Nut M6	00430-02	2
Washer 6 mm	00153-04	2
Washer 10 mm	03118-05	1
Sticker set	10207-01	1
Sticker Memo notes	01180-01	1
Owner´s manual	07241-02	1
Bracket	01082-03	1

Note!

Please note that there can be small differences between your product and the images in these instructions.

Note!

Please note that during storage and transport, especially at high ambient temperature, some of the oil and grease used for assembly may leak and stain the packaging. This will not cause damage to the product, wipe off the excessive oil or grease with a cloth.

Note!

Before you install this product, check the kit contents. If anything is missing, please contact an Öhlins dealer.

⚠ Warning!

Before you install this product, read the Öhlins Owner's manual. This product is an important part of the vehicle and the vehicle stability.

Shock absorber for BMW F900GS

BM 307

Mounting Instructions

ÖHLINS
ADVANCED SUSPENSION TECHNOLOGY

MOUNTING INSTRUCTIONS

⚠ Warning!

We strongly recommend to let an Öhlins dealer install this product.

⚠ Warning!

If you work with a lifted vehicle, make sure that it is safely supported to prevent it from tipping over.

Note!

When you work with this product, see the vehicle service manual for vehicle specific procedures and important data.

Note!

Before you install this product clean the vehicle.

1

Put bike on a stand so that the rear wheel barely touch the ground.

2

Remove the seat.

3

Remove the whole tank fairing.

4

Remove side covers for easy access of the upper shock absorber screw.

5

Move chain guard out of the way to allow access to lower shock absorber screw.

6

Remove shock absorber according to BMW workshop manuals.

7

Mount Öhlins shock absorber in the same way but reversed.

8

Mount the hydraulic preload master cylinder with the supplied bracket (01082-03), screws (05404-06), washers (00153-04) and nuts (00430-02) behind right foot peg bracket. The supplied bracket shall be mounted with the screw to the right in the picture. Make sure that the preload adjuster hose runs freely above the shock absorber.

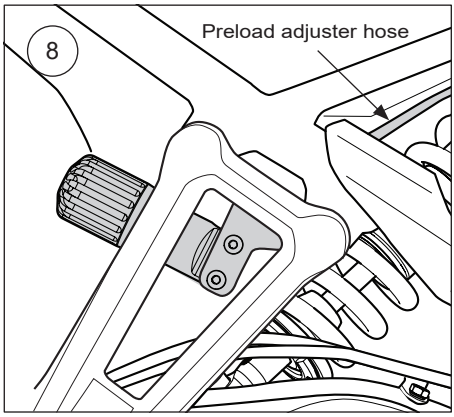

MOUNTING INSTRUCTIONS

9

Mount the supplied washers (03118-05) between the frame and the foot peg bracket.

10

Reassemble fairings, side covers, seat and chain guard.

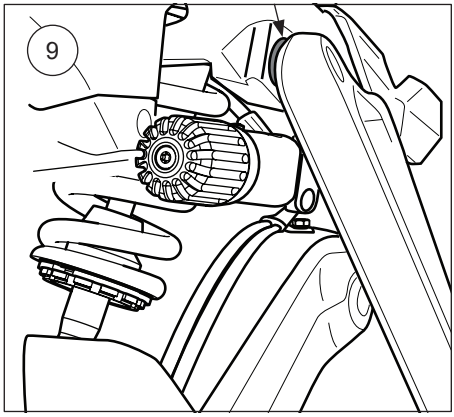

ADJUSTMENTS

⚠ Warning!

Before you ride/drive, always make sure that the setup is according to the recommended setup data. Read about adjustments and setting up in the Öhlins Owner's Manual before you make any adjustments. Contact an Öhlins dealer if you have any questions about setting up.

⚠ Warning!

If you have disassembled the spring, make sure that you reinstall both steel washers correctly when reinstalling the spring. One steel washer shall be mounted between spring and spring clip, and one steel washer shall be mounted between the spring and hydraulic preload adjuster. See picture to the right.

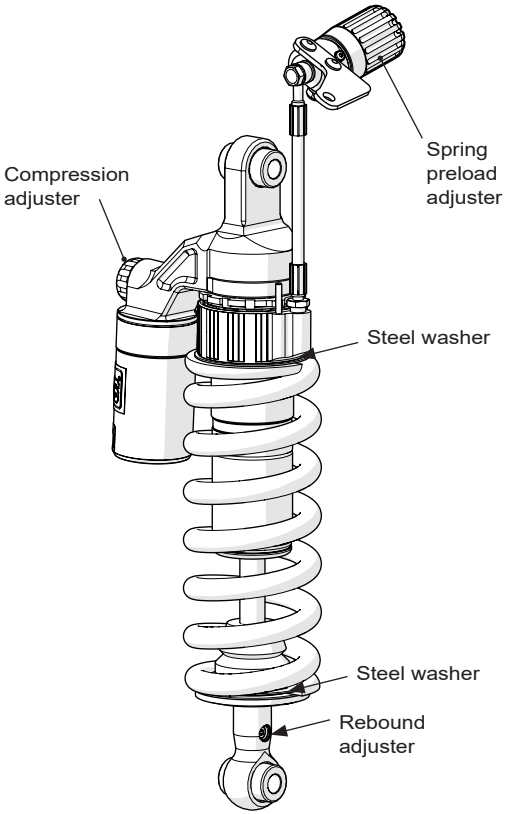

SETUP DATA

Length	394,5	mm
Stroke	81	mm
Spring (part.no.)	01099-59	
Spring preload	7 +7/-3	mm
Spring rate	150	N/mm
Spring free length	220	mm
Touring		
Compression	18	Clicks
Rebound	22	Clicks
Road (Factory setting)		
Compression	16	Clicks
Rebound	20	Clicks
Off road		
Compression	12	Clicks
Rebound	16	Clicks

Recommended Ride height		
R1-R3	75	mm

Öhlins products are subject to continuous improvement and development, therefore, although these instructions include the most up-to-date information available at the time of printing, minor updates may occur.

To find the latest information contact an Öhlins distributor. Please contact Öhlins if you have any questions regarding the contents in this document.

Part no. MI_BM307_0
Issued 2025-06-18

© Öhlins Racing AB. All rights reserved. Any reprinting or unauthorized use without the written permission of Öhlins Racing AB is prohibited.

Öhlins Racing AB
Box 722
S-194 27 Upplands Väsby, Sweden
Phone +46 8 590 025 00
fax +46 8 590 025 80

ÖHLINS
ADVANCED SUSPENSION TECHNOLOGY

www.ohlins.com