# HONDA FORZA 350

## 53538AKN HOMOLOGATED ALUMINIUM "DARK" SILENCER

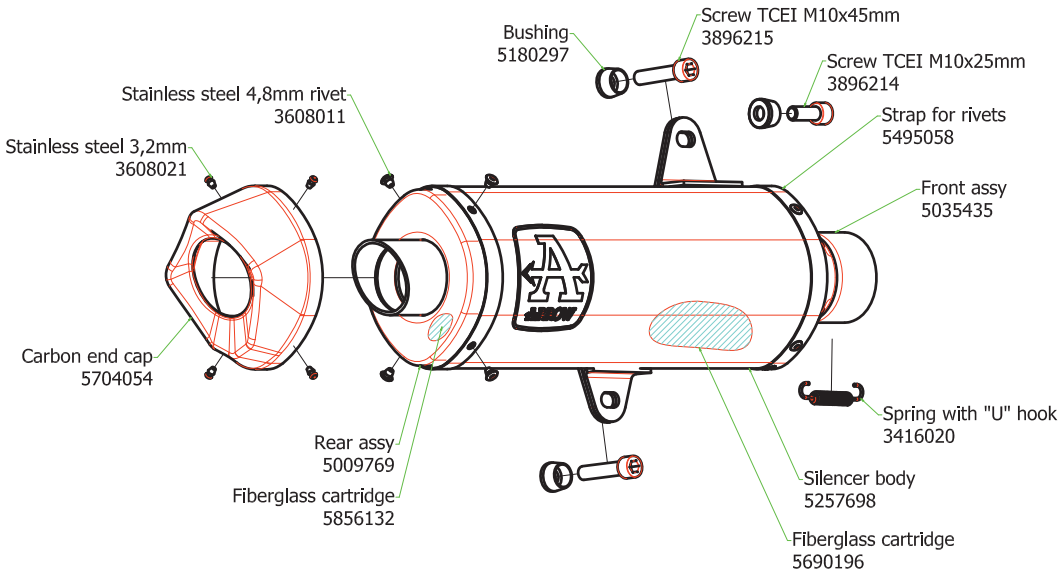


## 53058KZ CATALYTIC HOMOLOGATED LINK PIPE

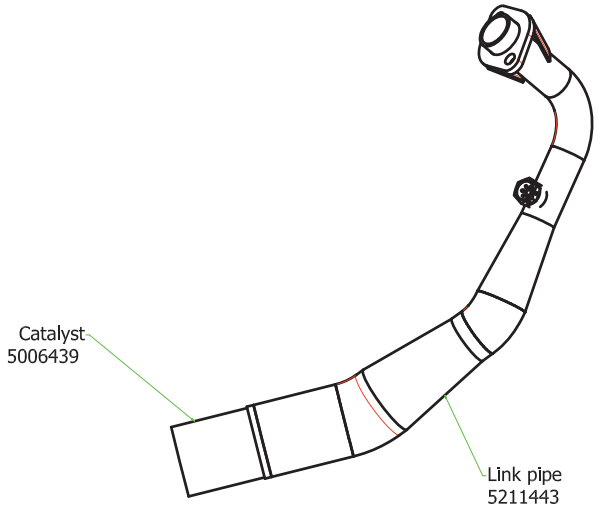


## 53538ANN HOMOLOGATED ALUMINIUM "DARK" SILENCER

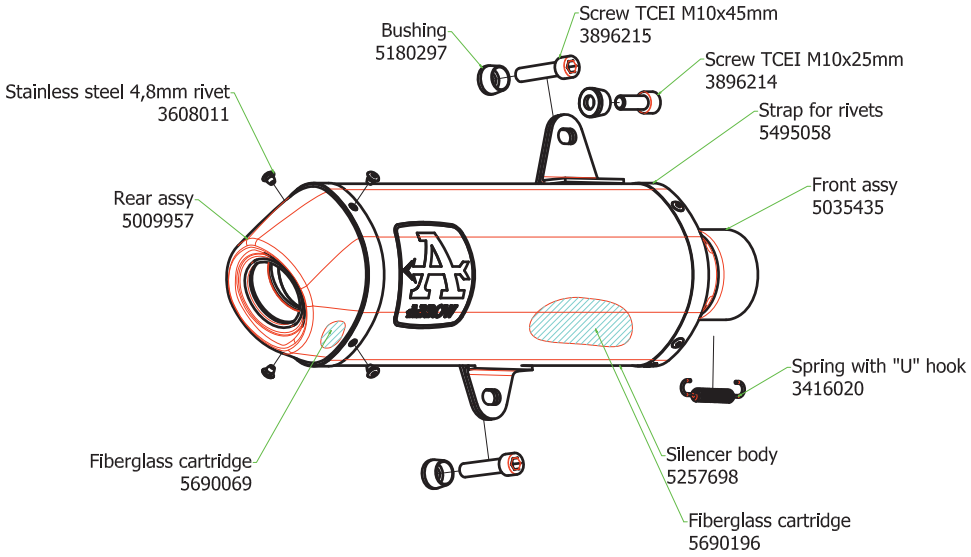


GP0062

## 53058MI RACING LINK PIPE

