GAS GAS ES 700

72624PK TITANIUM SILENCER
72624AK ALUMINIUM SILENCER
72624AKN ALUMINIUM "DARK" SILENCER

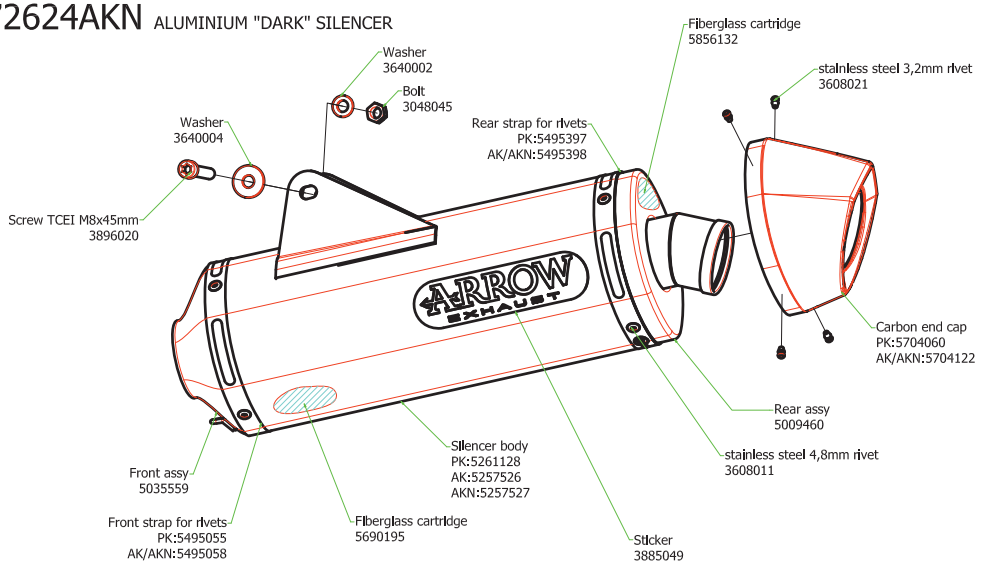

72624PO TITANIUM SILENCER
72624AO ALUMINIUM SILENCER
72624AON ALUMINIUM "DARK" SILENCER

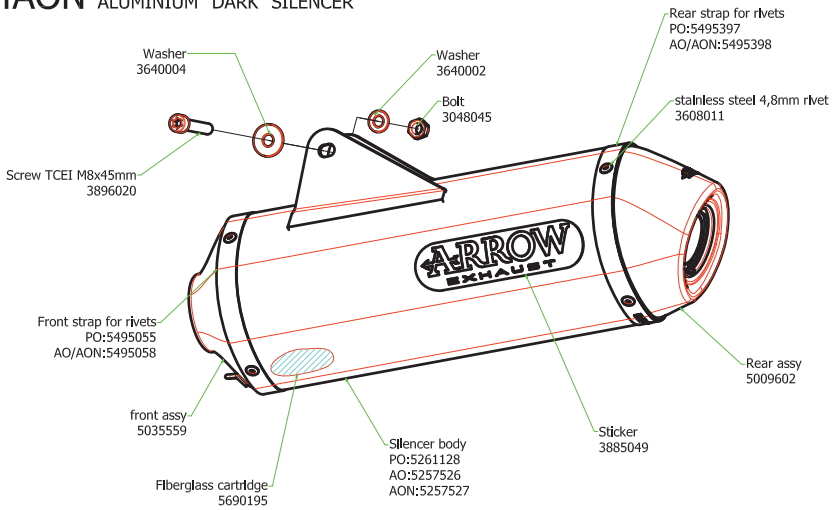

GP0067

72157PD RACING COLLECTOR

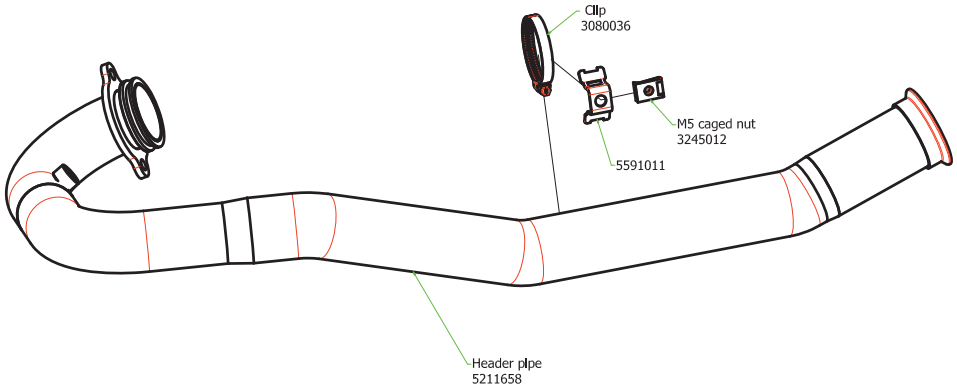

72156PD RACING LINK PIPE

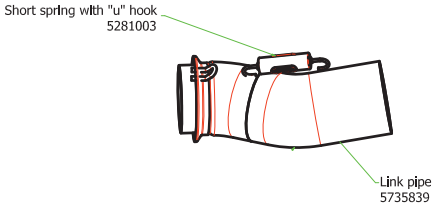

72156PZ CATALYTIC HOLOGATED LINK PIPE

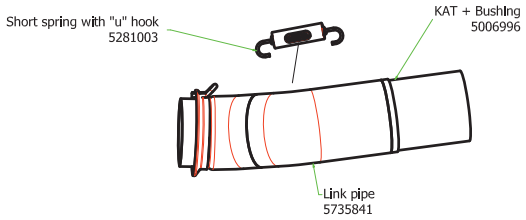

DB-KILLER
12005PD