Yamaha XSR 700 ' 16

71843JR Homologated Titanium - Carbon

71843JRN Homologated Inox "DARK" - Carbon

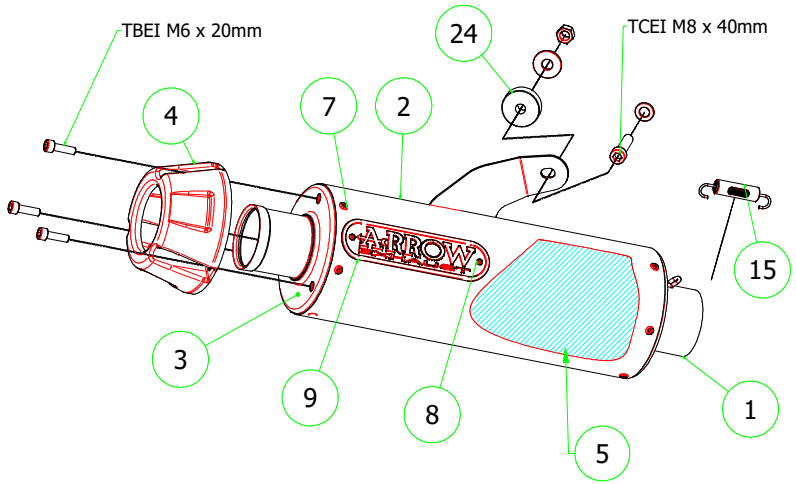

71642MI Racing Collectors

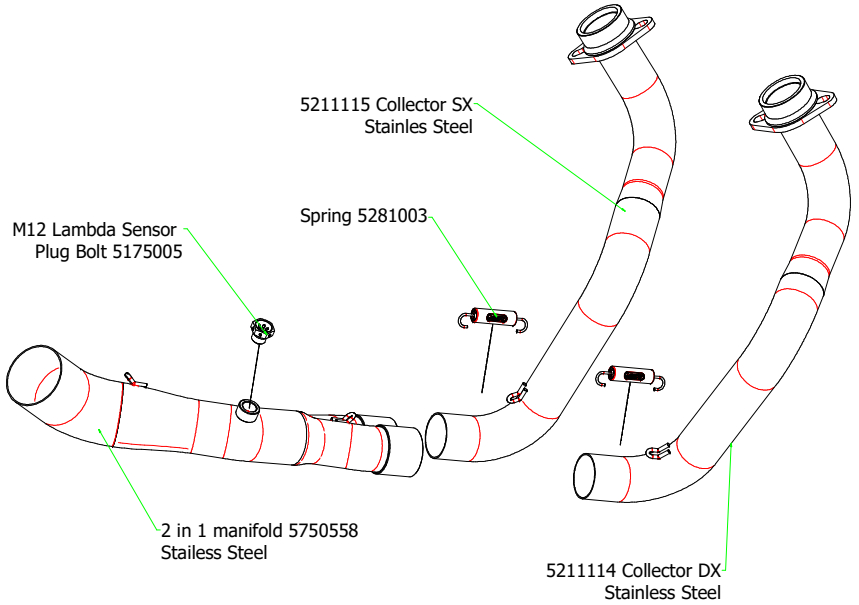

71642KZ Catalytic Homologated Collectors

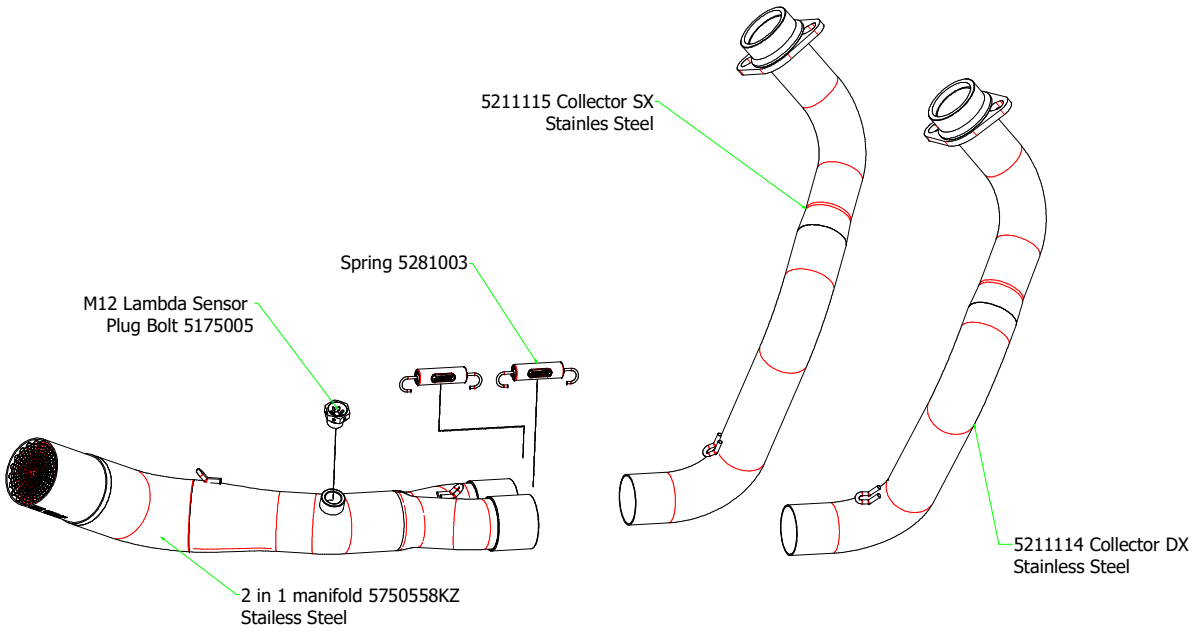

BL1097

PARTI DI RICAMBIO / *SPARE PARTS*

ID	DESCRIZIONE / *DESCRIPTION*	71843JR cod	71843JRN cod
1	Assieme anteriore / *Front assembly*	**5035288**	**5035288**
2	Corpo Marmitta / *Silencer Sleeve*	**5260923**	**5265016**
3	Assieme Posteriore / *Rear assembly*	**5010019**	**5010019**
4	Fondello in carbonio /*Carbon fibre end cap*	**5704132**	**5704132**
5	Materiale fonoassorbente / *Sound-absorbant material*	**5690109**	**5690109**
7	Rivetto inox mm 4.8 / *Stainless Steel 4.8 mm Rivet*	**3608011**	**3608011**
8	Rivetto allum.mm.3.0 / *Aluminium 3.0 mm Rivet*	**3608010**	**3608010**
9	Targhetta Arrow / *Arrow Plate*	**5855031**	**5855031**
15	Molla / *Spring*	**5281003**	**5281003**
24	Spessore / *Spacer*	**5180144**	**5180144**