KAWASAKI Z 125

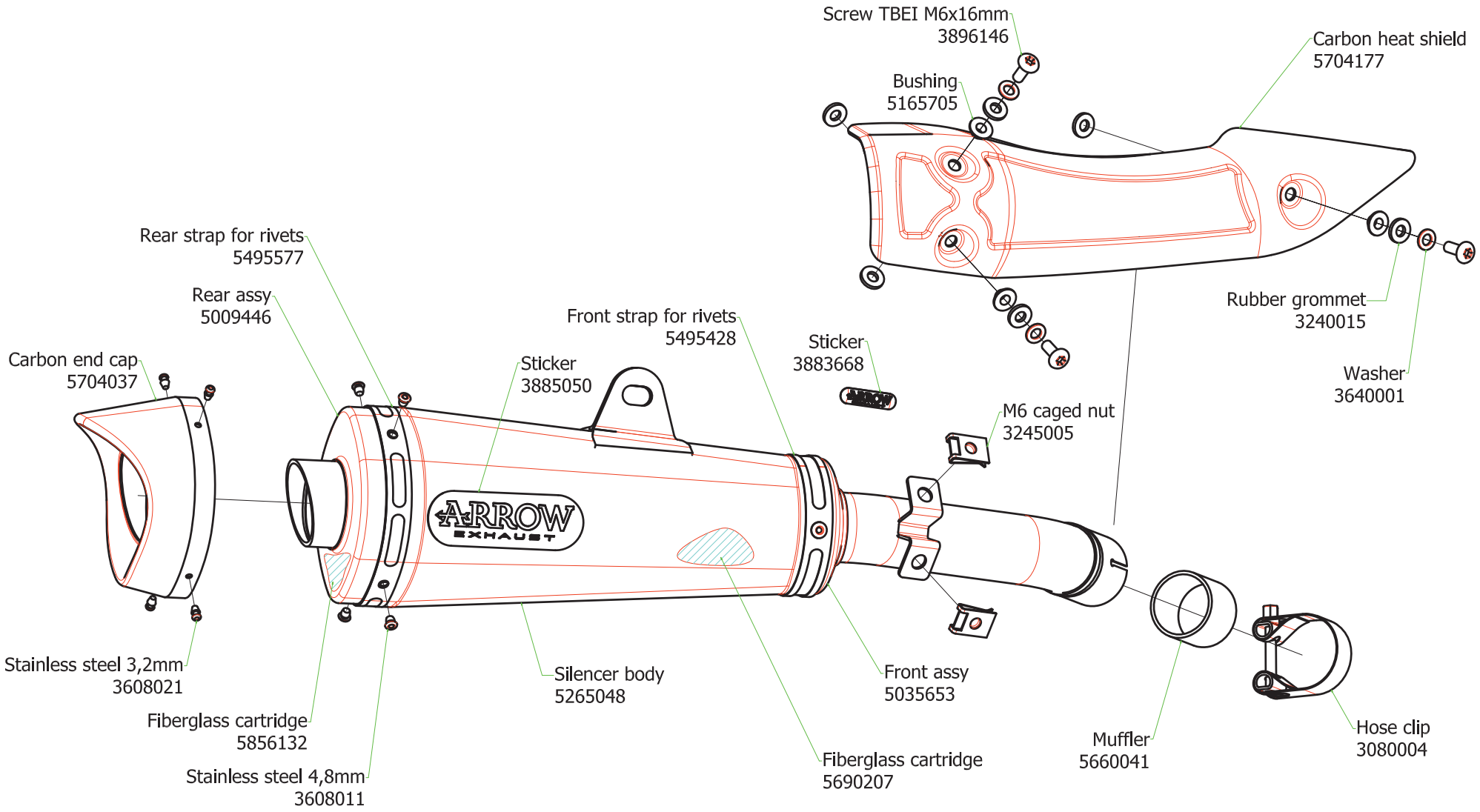

GP0063