KTM Duke 125 '17/20

71860PK Homologated Titanium
71860AK Homologated Aluminium
71860AKN Homologated Dark Aluminium
71860AKB Homologated White Aluminium

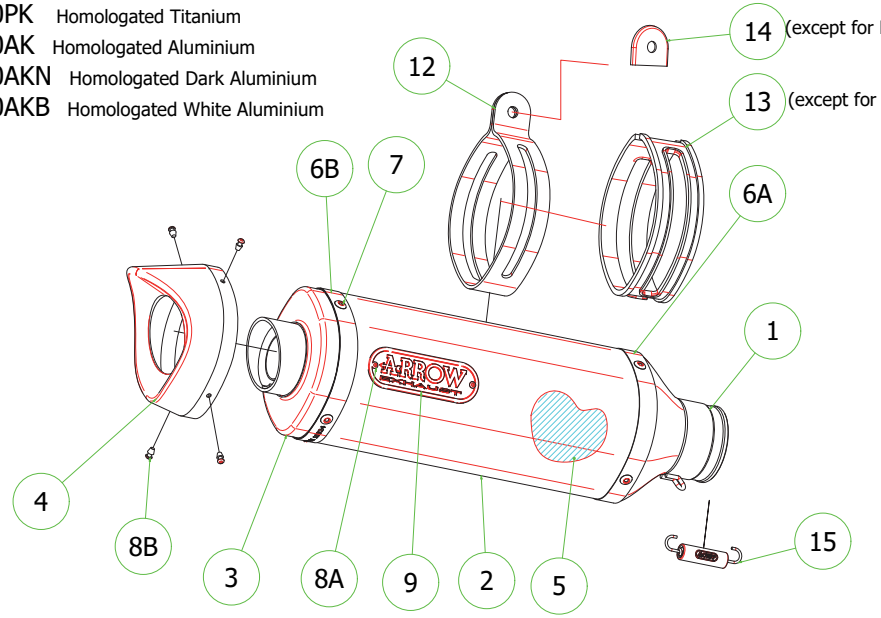

71675MI Link Pipe for Stock Collectors

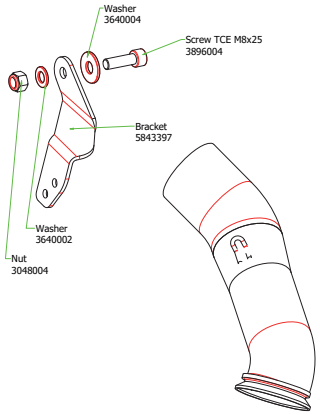

71668MI Non Catalyzed Link Pipe
Replaces Catalyzed Original Pipe

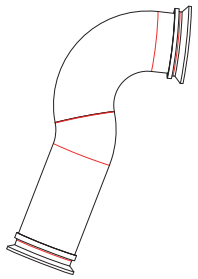

71866PRI Homologated Nichrom
71866PRN Homologated Dark Nichrom

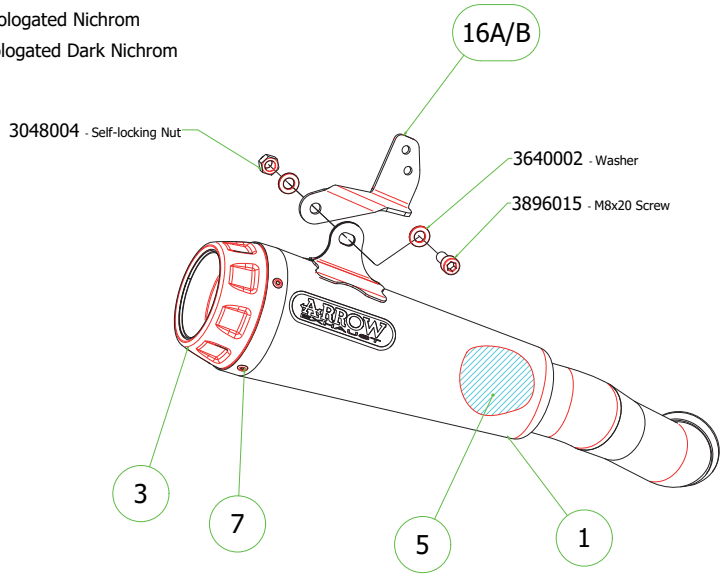

71817AO Homologated Aluminium
71817AON Homologated Dark Aluminium
71817AOB Homologated White Aluminium

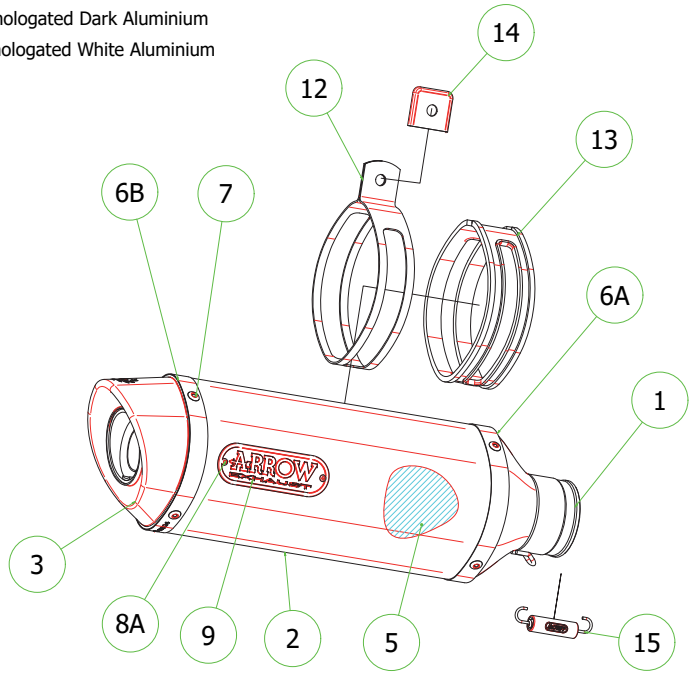

71536GP Homologated Titanium
71536GPI Homologated Dark Nichrom

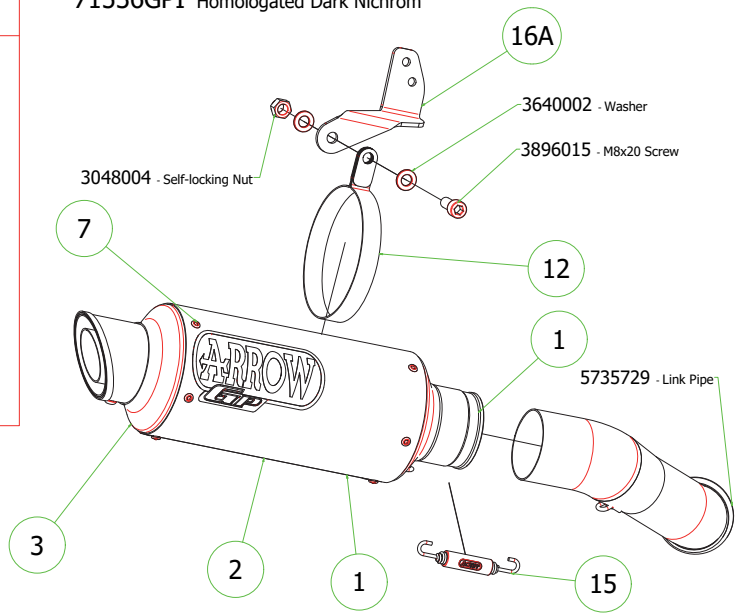

DC0034

PARTI DI RICAMBIO / *SPARE PARTS*

ID	DESCRIZIONE / *DESCRIPTION*	71860PK cod	71860AK cod	71860AKN cod	71860AKB cod	71860AO cod	71860AON cod	71860AOB cod	71866PRI cod	71866PRN cod	71536GP cod	71536GPI cod
1	Assieme anteriore / *Front assembly*	5008475	5008475	5008475	5008475	5008475	5008475	5008475			5008759	5035156
2	Corpo Marmitta / *Silencer Sleeve*	5260332	5257082	5257163	5262002	5257082	5257163	5262002	5254616	5254617	5261290	5265064
3	Assieme Posteriore / *Rear assembly*	5009448	5009448	5009448	5009448	5009381	5009381	5009381	5010078	5010078	5009701	5009948
4	Fondello in carbonio /*Carbon fibre end cap*	5704031	5704101	5704101	5704101							
5	Materiale fonoassorbente / *Sound-absorbant material*	5690150	5690150	5690150	5690150	5690150	5690150	5690150	19007UN	19007UN	5690106	5690106
6A	Fascetta di Serraggio Anteriore / Front *Strap For Rivets*	5495060	5495064	5495064	5495064	5495064	5495064	5495064				
6B	Fascetta di Serraggio Posteriore / Rear *Strap For Rivets*	5495468	5495470	5495470	5495470	5495470	5495470	5495470				
7A	Rivetto inox mm 4.8 / *Stainless Steel 4.8 mm Rivet*	3608011	3608011	3608011	3608011	3608011	3608011	3608011			3608011	3608011
7B	Rivetto inox mm 4.0 / *Stainless Steel 4.0 mm Rivet*								3608024	3608024		
8	Rivetto inox mm 3.2 / *Stainless Steel 3.2 mm Rivet*	3608021	3608021	3608021	3608021							
9	Targhetta Arrow / *Arrow Plate*	3885026	3885026	3885026	3885026	3885026	3885026	3885026			3885026	
10	Silenziatore Interno / *Db Killer*											
11	Seeger / *Retain Clip*											
12	Fascetta di Sostegno / *Silencer Clamp*	5490024	5480079	5480079	5480079	5480079	5480079	5480079			5490069	5490069
13	Guarnizione x Fascetta / *Clamp Gasket*		5630003	5630003	5630003	5630003	5630003	5630003				
14	Copri Fascetta / *Stainless Steel Clamp Protection*		5480004	5480004	5480004	5480004	5480004	5480004				
15	Molla / *Spring*	5281003	5281003	5281003	5281003	5281003	5281003	5281003			5281002	5281002
16A	Staffa sostegno (125cc) / *Bracket (125cc)*								5843397	5843397	5843397	5843397
16B	Staffa sostegno (390cc) / Bracket (390cc)								5843403	5843403		
17	Inserto Rapid Nut / *Caged nut insert*											
18	Fascetta Stringitubo / *Hose clip*											
19	Protezione / *Heat Shield*											
20	Gommino / *Rubber*											
21	Guarnizione di tenuta / *Gasket*											
22	Tappo Sonda Lambda / *Lambda Sensor Plug Bolt*											
23	Riduzione sonda lambda / Lambda Sensor Boss											
24	Spessore / *Spacer*											