# BMW S 1000 RR '09/14 Full System "Competition"

71117CKZ Full Titanium Competition Race Tech
71116CKZ Full System Competition Race Tech

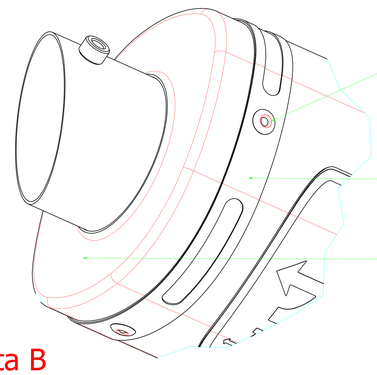


Vista B

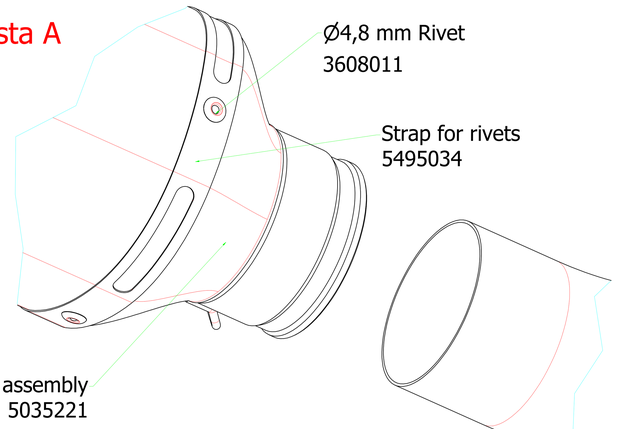


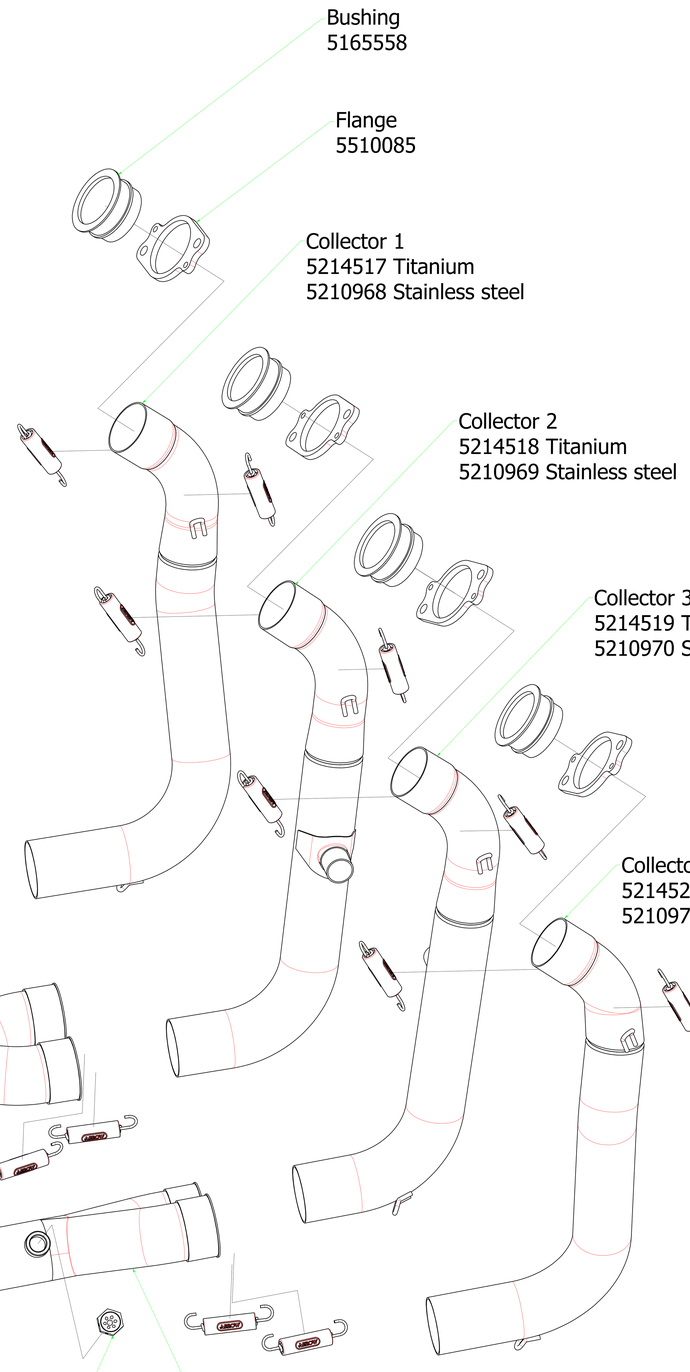


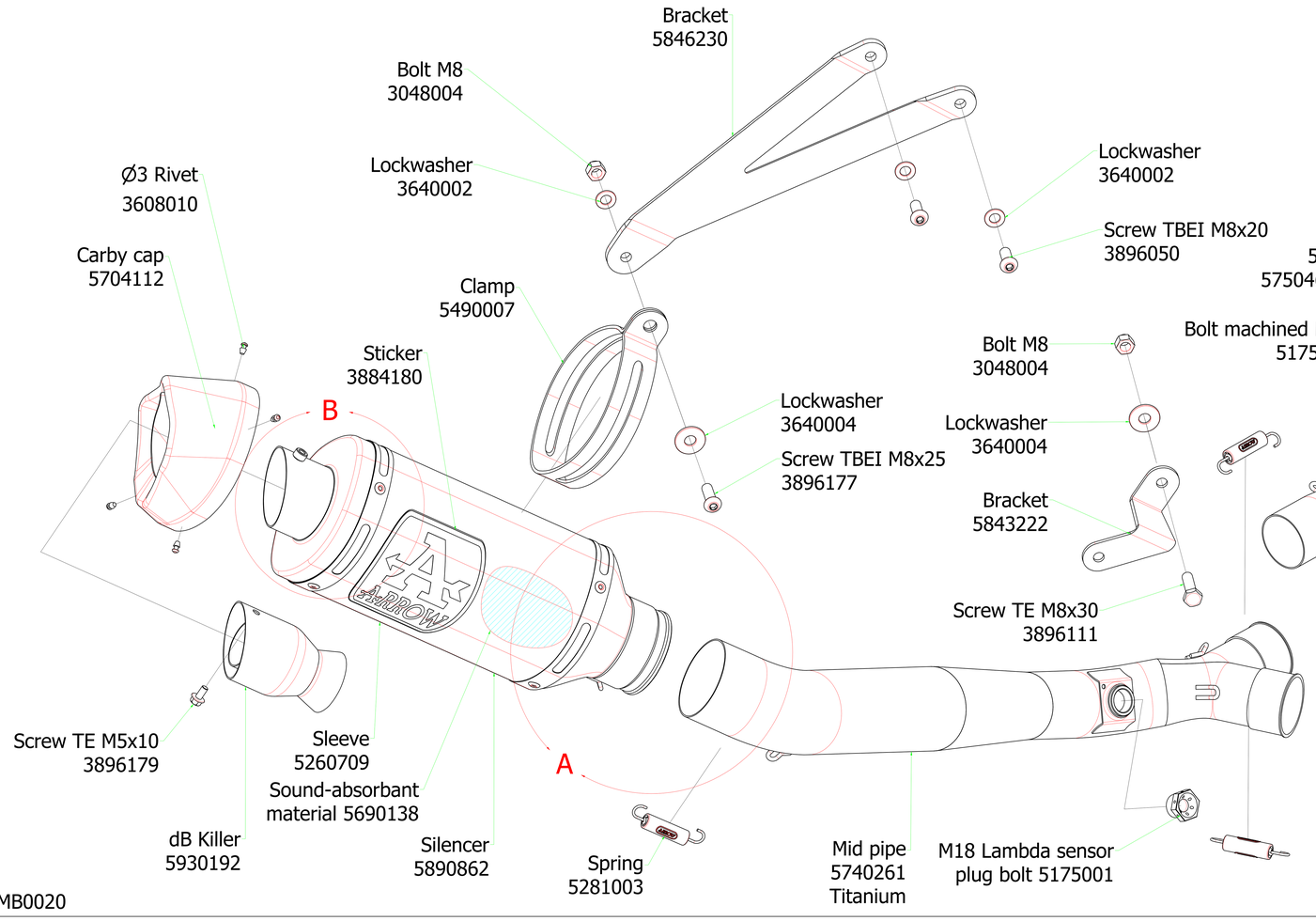


MB0020